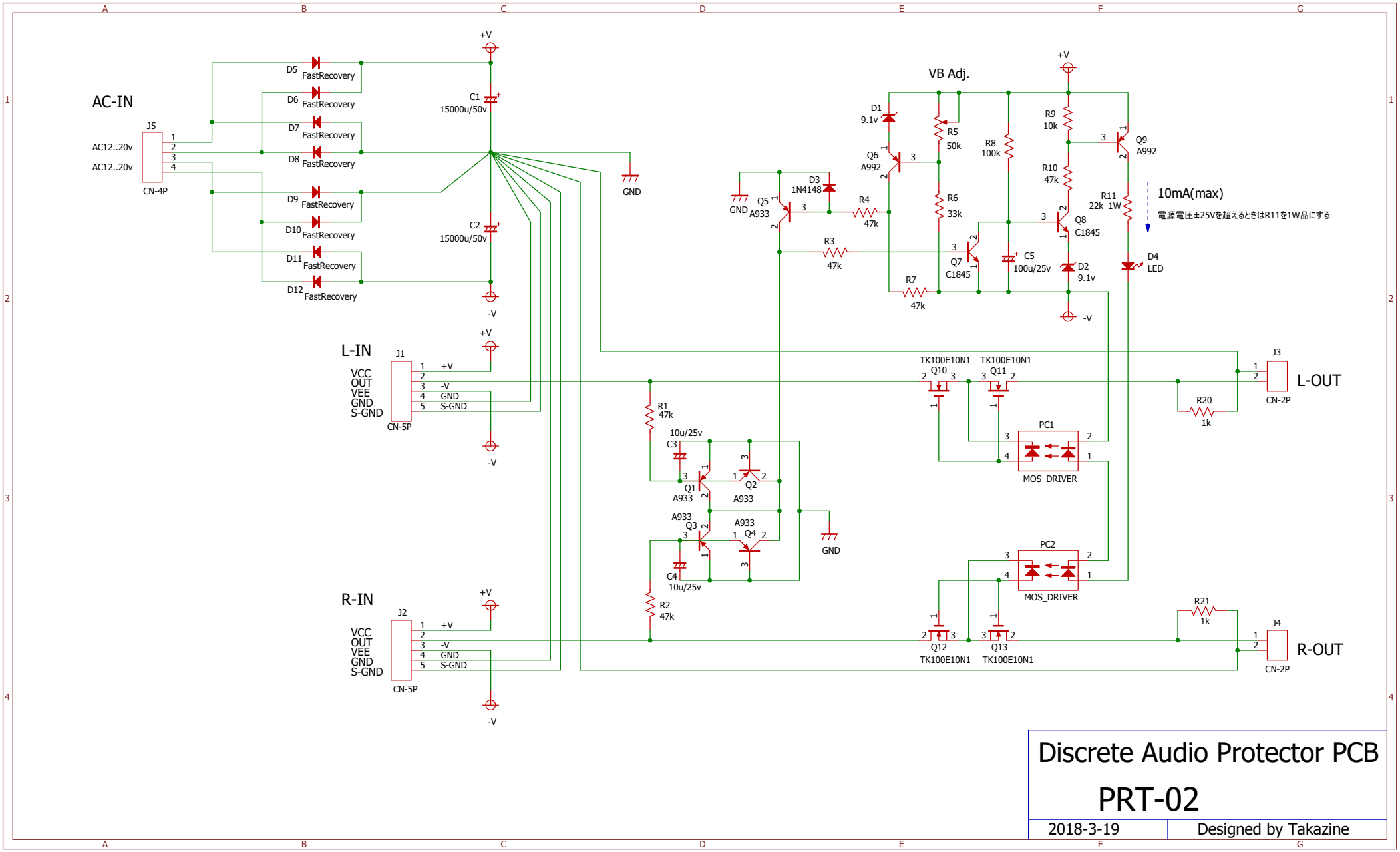
AC-IN
J5
AC12..20v
AC12..20v
CN-4P
D5 FastRecovery
D6 FastRecovery
D7 FastRecovery
D8 FastRecovery
D9 FastRecovery
D10 FastRecovery
D11 FastRecovery
D12 FastRecovery
C1 15000u/50v
C2 15000u/50v
+V
-V
GND
VB Adj.
D1 9.1v
R5 50k
R6 33k
R7 47k
R8 100k
R9 10k
R10 47k
R11 22k_1W
Q6 A992
Q7 C1845
Q8 C1845
Q9 A992
D2 9.1v
D3 1N4148
D4 LED
C5 100u/25v
Q5 A933
R3 47k
R4 47k
10mA(max)
電源電圧±25Vを超えるときはR11を1W品にする
L-IN
J1
VCC
OUT
VEE
GND
S-GND
CN-5P
R-IN
J2
R1 47k
R2 47k
C3 10u/25v
C4 10u/25v
Q1 A933
Q2 A933
Q3 A933
Q4 A933
TK100E10N1 Q10
TK100E10N1 Q11
Q12 TK100E10N1
Q13 TK100E10N1
PC1 MOS_DRIVER
PC2 MOS_DRIVER
R20 1k
R21 1k
J3
L-OUT
J4
R-OUT
CN-2P
Discrete Audio Protector PCB
PRT-02
2018-3-19
Designed by Takazine