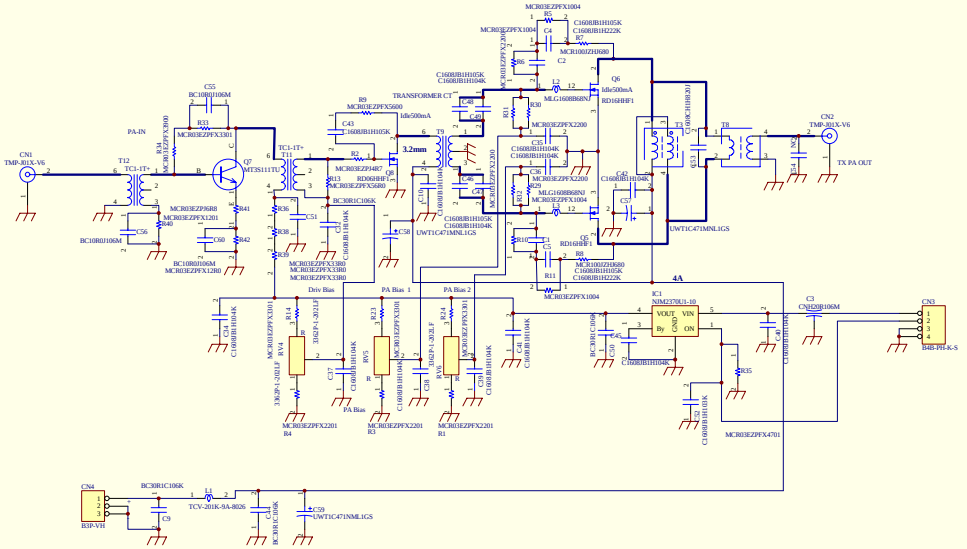

Title	CQ-HFradio5WPA		
Size: Orcad C	Number: 080210-5		Revision: V2.3
Date: 22-Jun-2014		Sheet of 6/7	
File: E:\CQ-HFR~1\SCHPA5.SCH		Drawn By: ADG,LTD.	