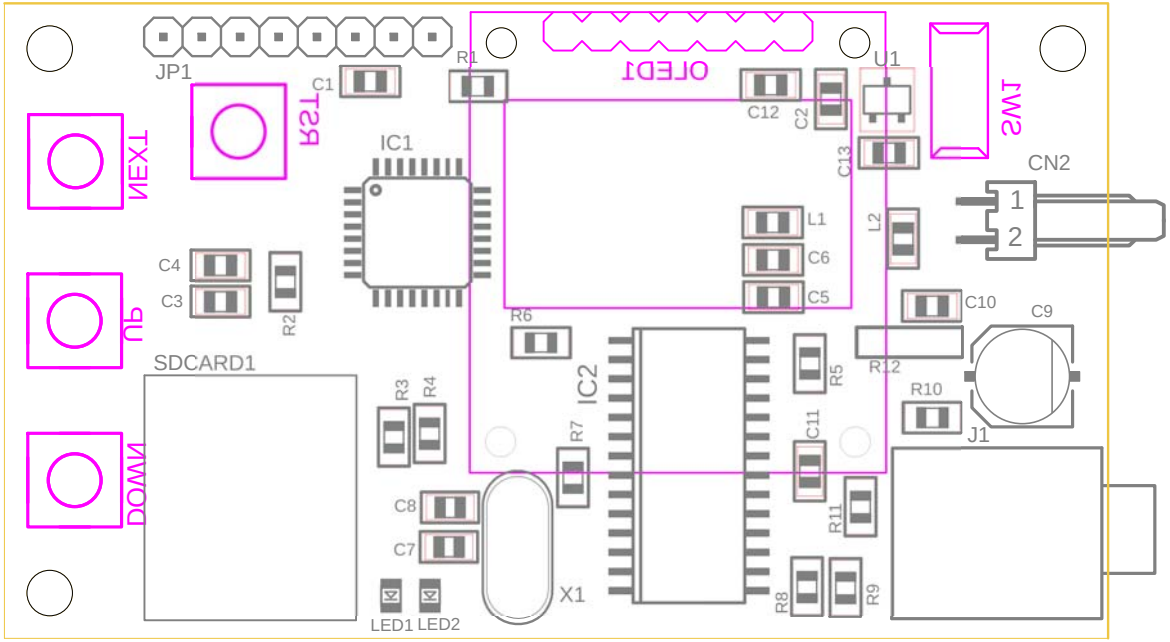

2021/03/05 8:32 f=2.00 D:\Eagle\Myproject\PIC32CM\MP3Player3\MP3Player3.brd