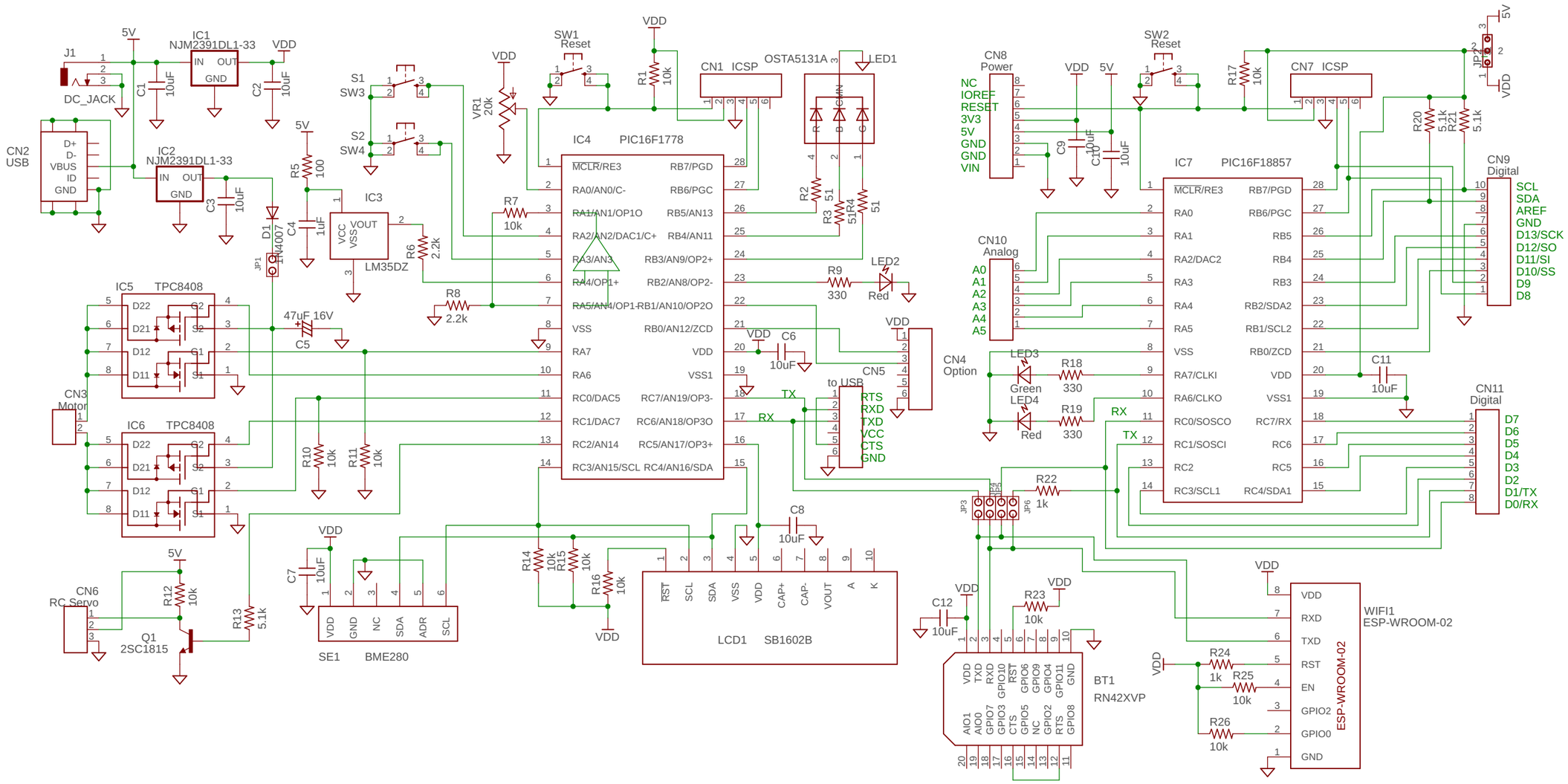
J1
DC_JACK
CN2
USB
D+
D-
VBUS
ID
GND
5V
IC1
NJM2391DL1-33
IN
OUT
GND
C1
10uF
C2
10uF
VDD
IC2
NJM2391DL1-33
C3
10uF
D1
1N4007
JP1
S1
SW3
S2
SW4
R5
100
C4
1uF
IC3
VCC
VSS
VOUT
LM35DZ
R6
2.2k
VR1
20k
SW1
Reset
R1
10k
R7
10k
R8
2.2k
IC4
PIC16F1778
MCLR/RE3
RA0/AN0/C-
RA1/AN1/OP1O
RA2/AN2/DAC1/C+
RA3/AN3
RA4/OP1+
RA5/AN4/OP1-
VSS
RA7
RA6
RC0/DAC5
RC1/DAC7
RC2/AN14
RC3/AN15/SCL
RB7/PGD
RB6/PGC
RB5/AN13
RB4/AN11
RB3/AN9/OP2+
RB2/AN8/OP2-
RB1/AN10/OP2O
RB0/AN12/ZCD
VDD
VSS1
RC7/AN19/OP3-
RC6/AN18/OP3O
RC5/AN17/OP3+
RC4/AN16/SDA
CN1 ICSP
OSTA5131A
LED1
R
B
G
R2
51
R3
51
R4
51
R9
330
LED2
Red
C6
10uF
CN5
to USB
RTS
RXD
TXD
VCC
CTS
GND
TX
RX
IC5
TPC8408
D22
D21
D12
D11
G2
S2
G1
S1
47uF 16V
C5
CN3
Motor
IC6
TPC8408
R10
10k
R11
10k
CN6
RC Servo
R12
10k
Q1
2SC1815
R13
5.1k
C7
10uF
VDD
GND
NC
SDA
ADR
SCL
SE1
BME280
R14
10k
R15
10k
R16
10k
C8
10uF
RST
SCL
SDA
VSS
VDD
CAP+
CAP-
VOUT
A
K
LCD1
SB1602B
CN8
Power
NC
IOREF
RESET
3V3
5V
GND
GND
VIN
C9
10uF
C10
10uF
SW2
Reset
R17
10k
CN7 ICSP
JP2
IC7
PIC16F18857
MCLR/RE3
RA0
RA1
RA2/DAC2
RA3
RA4
RA5
VSS
RA7/CLKI
RA6/CLKO
RC0/SOSCO
RC1/SOSCI
RC2
RC3/SCL1
RB7/PGD
RB6/PGC
RB5
RB4
RB3
RB2/SDA2
RB1/SCL2
RB0/ZCD
VDD
VSS1
RC7/RX
RC6
RC5
RC4/SDA1
R20
5.1k
R21
5.1k
CN9
Digital
SCL
SDA
AREF
GND
D13/SCK
D12/SO
D11/SI
D10/SS
D9
D8
CN10
Analog
A0
A1
A2
A3
A4
A5
CN4
Option
LED3
Green
LED4
Red
R18
330
R19
330
C11
10uF
CN11
Digital
D7
D6
D5
D4
D3
D2
D1/TX
D0/RX
R22
1k
JP3
JP5
JP6
C12
10uF
R23
10k
BT1
RN42XVP
VDD
TXD
RXD
GPIO10
RST
GPIO6
GPIO9
GPIO4
GPIO11
GND
AIO1
AIO0
GPIO7
GPIO3
CTS
GPIO5
NC
GPIO2
RTS
GPIO8
WIFI1
ESP-WROOM-02
VDD
RXD
TXD
RST
EN
GPIO2
GPIO0
GND
R24
1k
R25
10k
R26
10k