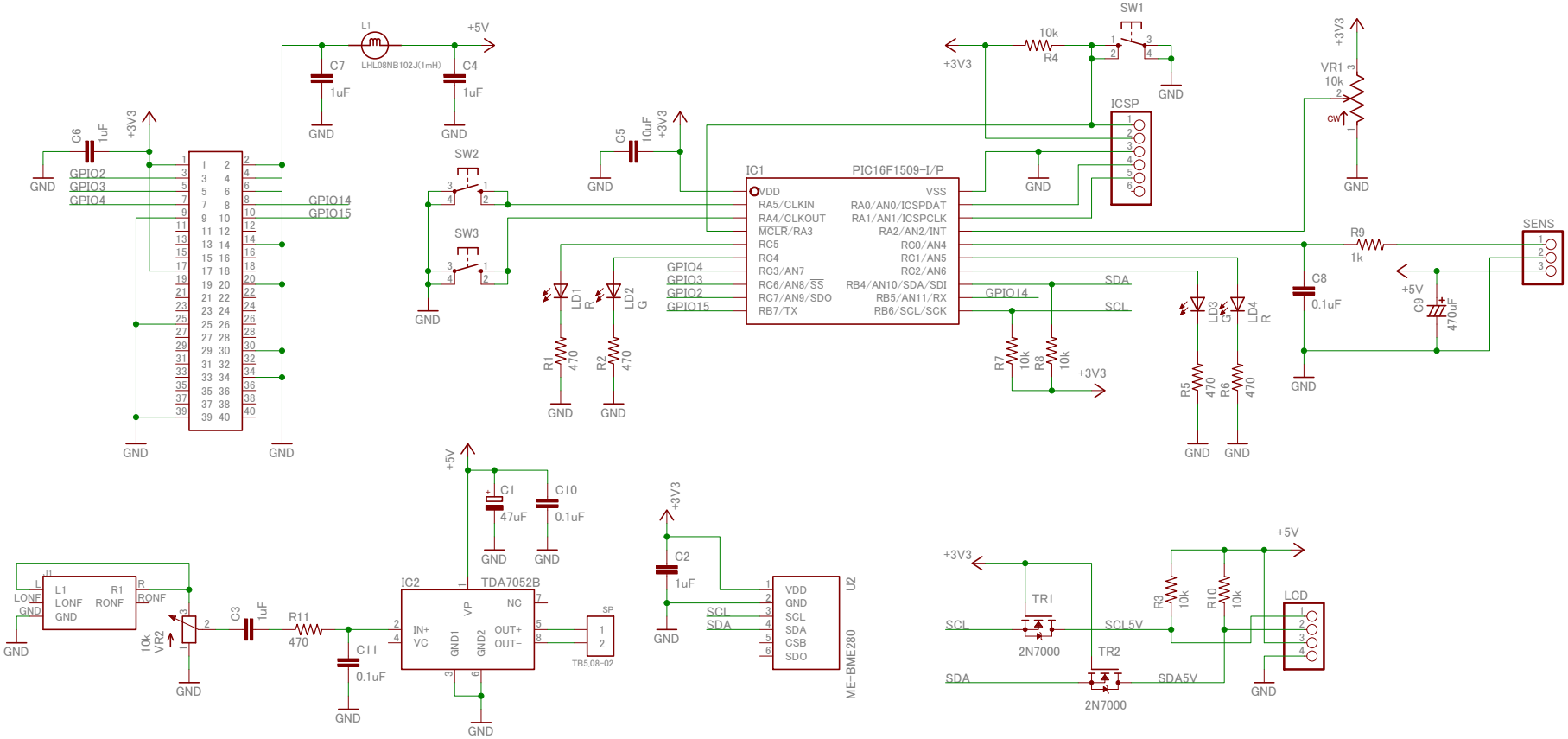

2016/10/21 7:58 f=0.80 D:¥Eagle¥Myproject¥CQSeries¥BitTrade¥EAGLE (5)¥t_clock_v122_20160824.sch (Sheet: 1/1)