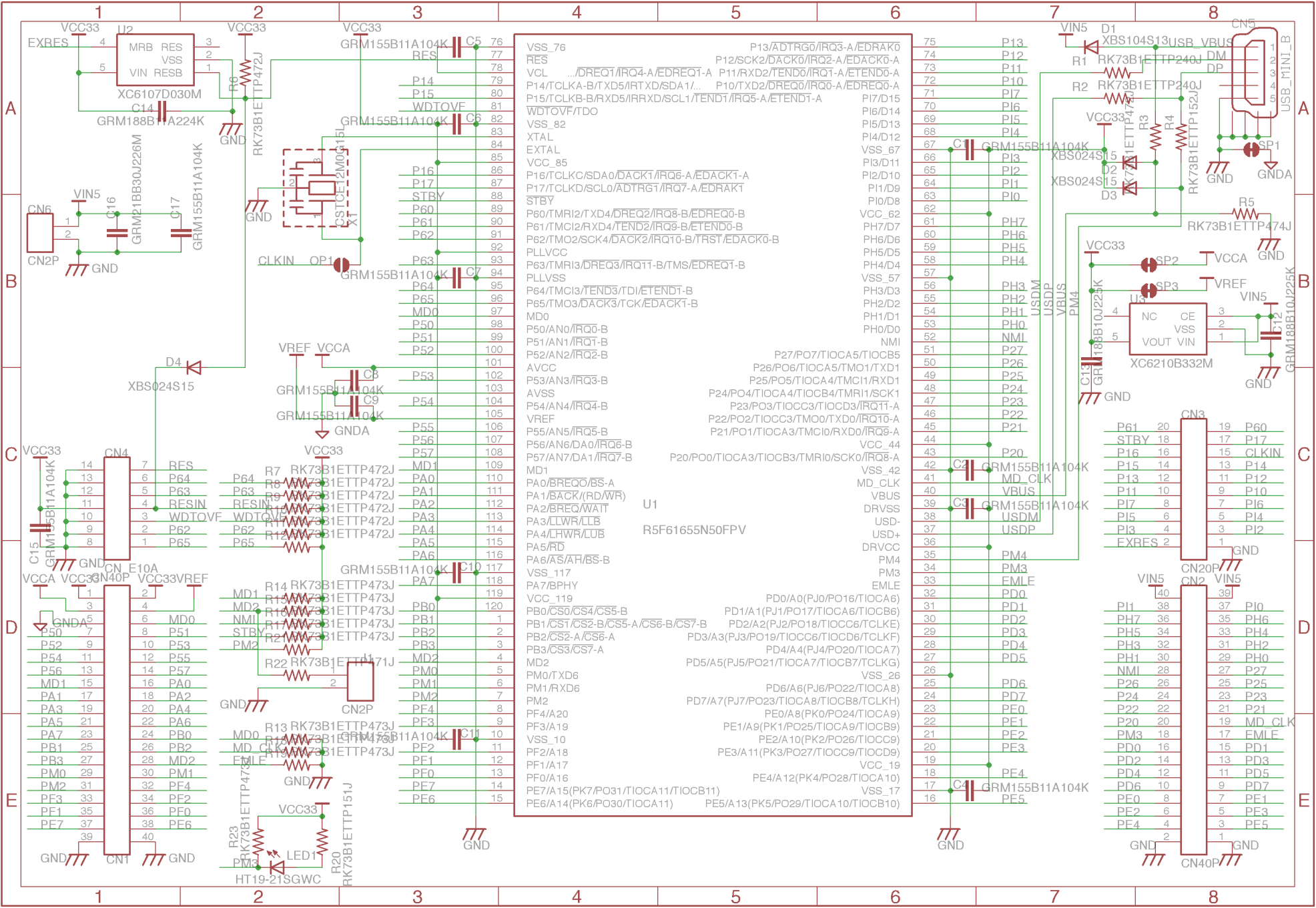
U1
R5F61655N50FPV
U2
XC6107D030M
U3
XC6210B332M
CN1
CN40P
CN2
CN20P
CN3
CN4
CN_E10A
CN5
USB_MINI_B
CN6
CN2P
XT1
CSTCE12M0G15L
LED1
HT19-21SGWC
D1
XBS104S13
D2
XBS024S15
D3
XBS024S15
D4
XBS024S15
OP1
SP1
SP2
SP3
VCCA
VREF
GNDA
GND
VCC33
VIN5
USB_VBUS
DM
DP
EXRES
CLKIN
RES
WDTOVF
RESIN
MD0
MD1
MD2
MD_CLK
EMLE
VBUS
USDM
USDP
PM4
PM3
PM2
PM1
PM0
STBY
P61
P60
P17
P16
P15
P14
P13
P12
P11
P10
P7
P6
P5
P4
P3
P2
P1
P0
PH7
PH6
PH5
PH4
PH3
PH2
PH1
PH0
NMI
P27
P26
P25
P24
P23
P22
P21
P20
PD7
PD6
PD5
PD4
PD3
PD2
PD1
PD0
PE7
PE6
PE5
PE4
PE3
PE2
PE1
PE0
PF7
PF6
PF4
PF3
PF2
PF1
PF0
PA7
PA6
PA5
PA4
PA3
PA2
PA1
PA0
PB7
PB6
PB5
PB4
PB3
PB2
PB1
PB0
P57
P56
P55
P54
P53
P52
P51
P50
P65
P64
P63
P62
P61
P60
VSS_76
RES
VCL
P14/TCLKA-B/TXD5/IRTXD/SDA1/...
P15/TCLKB-B/RXD5/IRRXD/SCL1/TEND1/IRQ5-A/ETEND1-A
WDTOVF/TDO
VSS_82
XTAL
EXTAL
VCC_85
P16/TCLKC/SDA0/DACK1/IRQ6-A/EDACK1-A
P17/TCLKD/SCL0/ADTRG1/IRQ7-A/EDRAK1
STBY
P60/TMRI2/TXD4/DREQ2/IRQ8-B/EDREQ0-B
P61/TMCI2/RXD4/TEND2/IRQ9-B/ETEND0-B
P62/TMO2/SCK4/DACK2/IRQ10-B/TRST/EDACK0-B
PLLVCC
P63/TMRI3/DREQ3/IRQ11-B/TMS/EDREQ1-B
PLLVSS
P64/TMCI3/TEND3/TDI/ETEND1-B
P65/TMO3/DACK3/TCK/EDACK1-B
MD0
P50/AN0/IRQ0-B
P51/AN1/IRQ1-B
P52/AN2/IRQ2-B
AVCC
P53/AN3/IRQ3-B
AVSS
P54/AN4/IRQ4-B
VREF
P55/AN5/IRQ5-B
P56/AN6/DA0/IRQ6-B
P57/AN7/DA1/IRQ7-B
MD1
PA0/BREQO/BS-A
PA1/BACK/(RD/WR)
PA2/BREQ/WAIT
PA3/LLWR/LLB
PA4/LHWR/LUB
PA5/RD
PA6/AS/AH/BS-B
VSS_117
PA7/BPHY
VCC_119
PB0/CS0/CS4/CS5-B
PB1/CS1/CS2-B/CS5-A/CS6-B/CS7-B
PB2/CS2-A/CS6-A
PB3/CS3/CS7-A
MD2
PM0/TXD6
PM1/RXD6
PM2
PF4/A20
PF3/A19
VSS_10
PF2/A18
PF1/A17
PF0/A16
PE7/A15(PK7/PO31/TIOCA11/TIOCB11)
PE6/A14(PK6/PO30/TIOCA11)
P13/ADTRG0/IRQ3-A/EDRAK0
P12/SCK2/DACK0/IRQ2-A/EDACK0-A
P11/RXD2/TEND0/IRQ1-A/ETEND0-A
P10/TXD2/DREQ0/IRQ0-A/EDREQ0-A
PI7/D15
PI6/D14
PI5/D13
PI4/D12
VSS_67
PI3/D11
PI2/D10
PI1/D9
PI0/D8
VCC_62
PH7/D7
PH6/D6
PH5/D5
PH4/D4
VSS_57
PH3/D3
PH2/D2
PH1/D1
PH0/D0
NMI
P27/PO7/TIOCA5/TIOCB5
P26/PO6/TIOCA5/TMO1/TXD1
P25/PO5/TIOCA4/TMCI1/RXD1
P24/PO4/TIOCA4/TIOCB4/TMRI1/SCK1
P23/PO3/TIOCC3/TIOCD3/IRQ11-A
P22/PO2/TIOCC3/TMO0/TXD0/IRQ10-A
P21/PO1/TIOCA3/TMCI0/RXD0/IRQ9-A
VCC_44
P20/PO0/TIOCA3/TIOCB3/TMRI0/SCK0/IRQ8-A
VSS_42
MD_CLK
VBUS
DRVSS
USD-
USD+
DRVCC
PM4
PM3
EMLE
PD0/A0(PJ0/PO16/TIOCA6)
PD1/A1(PJ1/PO17/TIOCA6/TIOCB6)
PD2/A2(PJ2/PO18/TIOCC6/TCLKE)
PD3/A3(PJ3/PO19/TIOCC6/TIOCD6/TCLKF)
PD4/A4(PJ4/PO20/TIOCA7)
PD5/A5(PJ5/PO21/TIOCA7/TIOCB7/TCLKG)
VSS_26
PD6/A6(PJ6/PO22/TIOCA8)
PD7/A7(PJ7/PO23/TIOCA8/TIOCB8/TCLKH)
PE0/A8(PK0/PO24/TIOCA9)
PE1/A9(PK1/PO25/TIOCA9/TIOCB9)
PE2/A10(PK2/PO26/TIOCC9)
PE3/A11(PK3/PO27/TIOCC9/TIOCD9)
VCC_19
PE4/A12(PK4/PO28/TIOCA10)
VSS_17
PE5/A13(PK5/PO29/TIOCA10/TIOCB10)
GRM155B11A104K
GRM188B11A224K
GRM21BB30J226M
GRM155B11A104K
GRM188B10J225K
RK73B1ETTP472J
RK73B1ETTP473J
RK73B1ETTP151J
RK73B1ETTP474J
RK73B1ETTP240J
RK73B1ETTP152J
RK73B1ETTP475J