VNWA3E – A Low Cost Vector Network Analyzer not just for Education

Prof. Dr. Thomas Baier
University of Applied Sciences Ulm
Prittwitzstrasse 10
89075 Ulm
Germany

Ulm, 22.4.2015

Part A: Design and Principle of Operation

Introduction:

The VNWA instrument series was originally designed to serve as a low cost RF vector network analyzer (VNWA) for educational purposes in student and radio amateur labs. Design constraints were on the one hand usability up to UHF frequencies and on the other hand extreme simplicity for lowest possible cost. While low cost suddenly enabled many potential users to being able to own a VNWA, the simplicity of design brings some limitations normally not experienced with high grade commercial instruments. On the other hand, the instrument is accompanied by a powerful software which can compensate some of the hardware's shortcomings. The software [1] can even be used without VNWA hardware for data visualization and manipulation. This first part of a series of articles explains the fundamental hardware design, the challenges and limitations that come with the design choices.

1. Basic Principle of Network Analyzers

A network analyzer is used to measure the signal power transmitted through a two port device under test (DUT) (e.g. a band pass filter) or the reflected power of a one or two port DUT (e.g. an antenna). Figure 1 shows the basic setup for a transmission measurement as it can be realized with a spectrum analyzer + tracking generator combination.

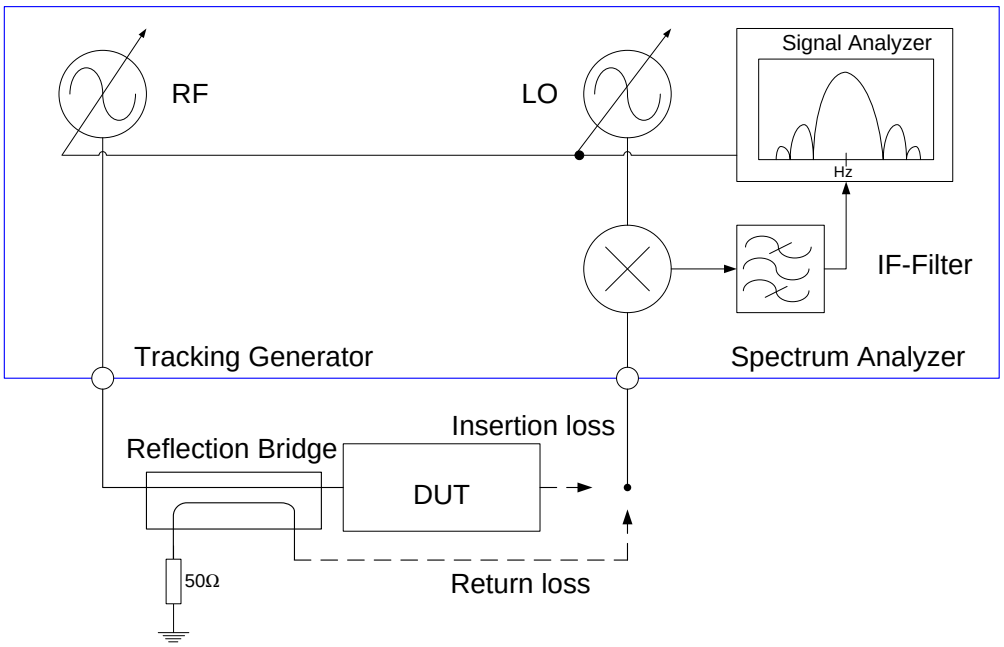

Figure 1: Basic network analyzer setup for measuring the transmission or reflection of a device under test (DUT) using a spectrum analyzer with tracking generator.

The signal of a tunable RF source is fed into the DUT to be measured. The RF source is generally called tracking generator as its frequency tracks that of the LO signal source with a constant displacement. The output signal of the DUT (for insertion loss measurements) or alternatively the output signal of an external directional coupler or reflection bridge (for reflection measurements) is fed into the spectrum analyzer's frontend mixer, where it is mixed with a tunable LO signal source to an intermediate frequency (IF). The power level of this IF signal is analyzed and ultimately displayed on a screen. Thus, the frequency dependent attenuation or reflection of the DUT can be obtained. Note, that the phase shift from DUT input to DUT output or the reflection phase shift cannot be determined with such a setup, which is thus called a *scalar* network analyzer. In contrast, a *vector* network analyzer (VNWA) can also measure these phase shifts by utilizing an additional receiver signal chain analyzing the DUT input signal.

2. VNWA Design

The design choices taken in today's VNWA3 design can only be understood when the design history is being taken into consideration. The original intention was to provide a lowest possible cost VNWA to student labs and radio amateurs. In order to meet this target, creative usage of components stretching the manufacturer's specifications was intended. Figure 2 shows the RF section of today's VNWA3 design. This is almost the same as the original VNWA1 [2] and VNWA2 [3] design. Like any VNWA it basically consists of a signal source and several receivers that can be tuned in synch over a wide frequency range.

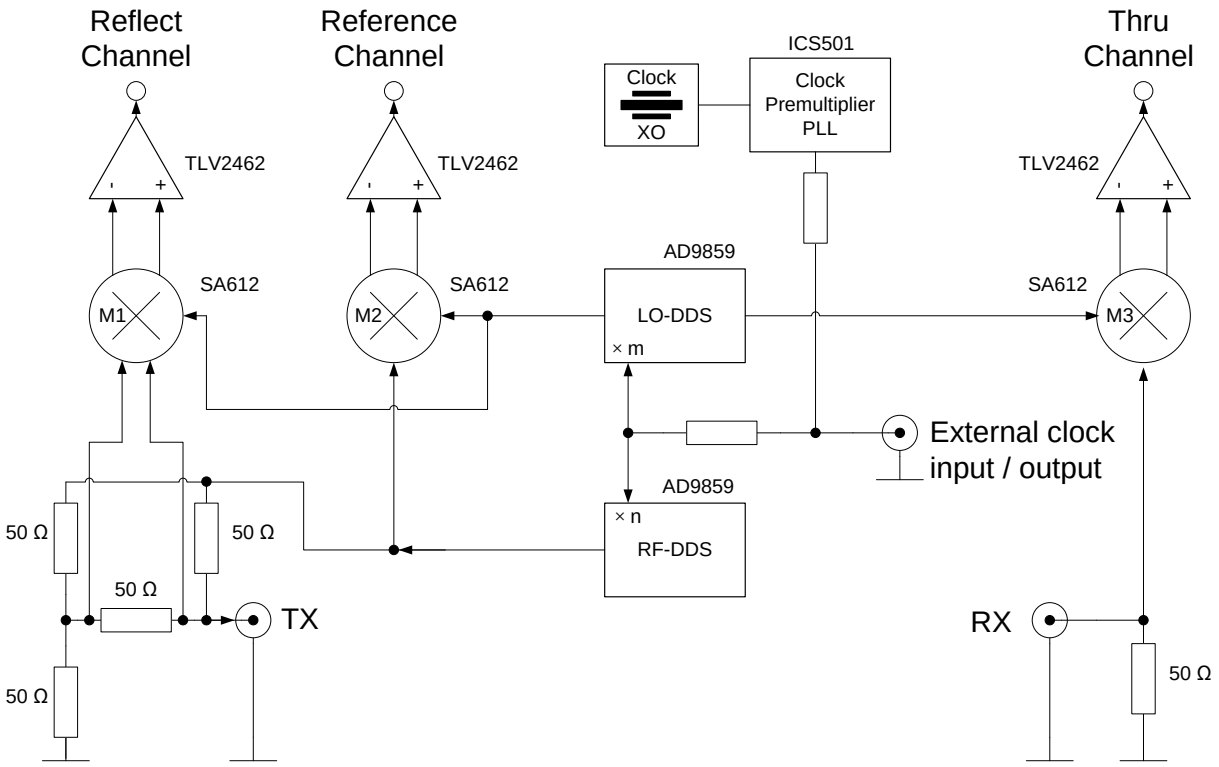

Figure 2: Block diagram of the VNWA3E RF section. This design is copyright protected by SDR-Kits.

The measurement signal is generated by a wideband RF direct digital synthesizer (DDS). It is routed through a reflection bridge to the VNWA's TX port and to the Reference receiver chain consisting of mixer M2 and a following amplifier. Mixer M1 together with its amplifier forms the Reflect receiver chain, which measures the signal reflected from the TX port. A third receiver chain formed by mixer M3 and its amplifier forms the thru receiver, which detects the signal applied to the VNWA's RX port. All mixers share the same local oscillator, which is formed by another DDS. Both DDSes (RF and LO) share a variable clock source formed by a crystal oscillator followed by a PLL frequency premultiplier circuit. Note, that both DDSes have additional independent clock multiplier circuits integrated.
This setup allows both reflection measurements of impedances connected to the TX port and transmission measurements of two port devices connected between the TX and RX port. Comparing the Reflect and Thru signals to the Reference signal allows to determine the signal PHASES on top of the signal amplitudes, which makes this network analyzer a *vector* one.

In order to save cost, VNWA1 and the early version of VNWA2 made excessive use of standard PC hardware. The DDS chips were directly controlled by the PC's parallel printer port and the amplified mixer output signals, which were chosen to lie in the audio frequency range, were routed to the line input of the PC's built-in sound card. A switch was used to either connect the Reflect and Reference signals or the Thru and Reference signals to the left and right channel of the sound capture device. Thus, hardly any hardware beyond the one depicted in Figure 2 was originally needed and the complete VNWA was very simple. The early VNWA2 version was distributed as a kit of parts to be manually assembled by the customer. But the progress in PC technology made this simple design soon obsolete. With the advent of notebook computers, both, the parallel printer port and built-in sound capture devices with stereo line input vanished. Therefore, a USB control interface board was developed for the original VNWA2, which also contained a USB sound chip to make up for the missing stereo input of most notebooks. VNWA3 integrated this USB control interface onto the VNWA PCB, so VNWA3 is a single board VNWA, which is shown in Figure 3 (top view) and Figure 4 (bottom view). Note, that all VNWA components except for a coaxial line have been placed on the top side of the two layer board. The bottom side exhibits a massive ground plane for uncompromised RF performance.

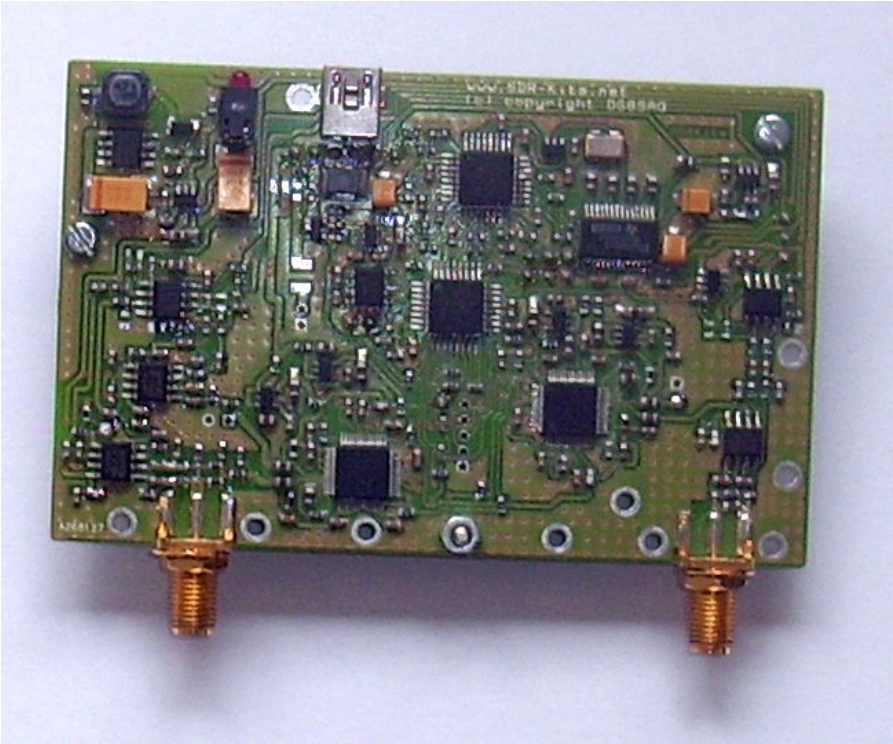

Figure 3: VNWA3 as seen from top mounted in a brass chassis. The TX section is seen on the lower left, the RX section is on the lower right. The digital part with the USB connector is found on the upper side in the center.

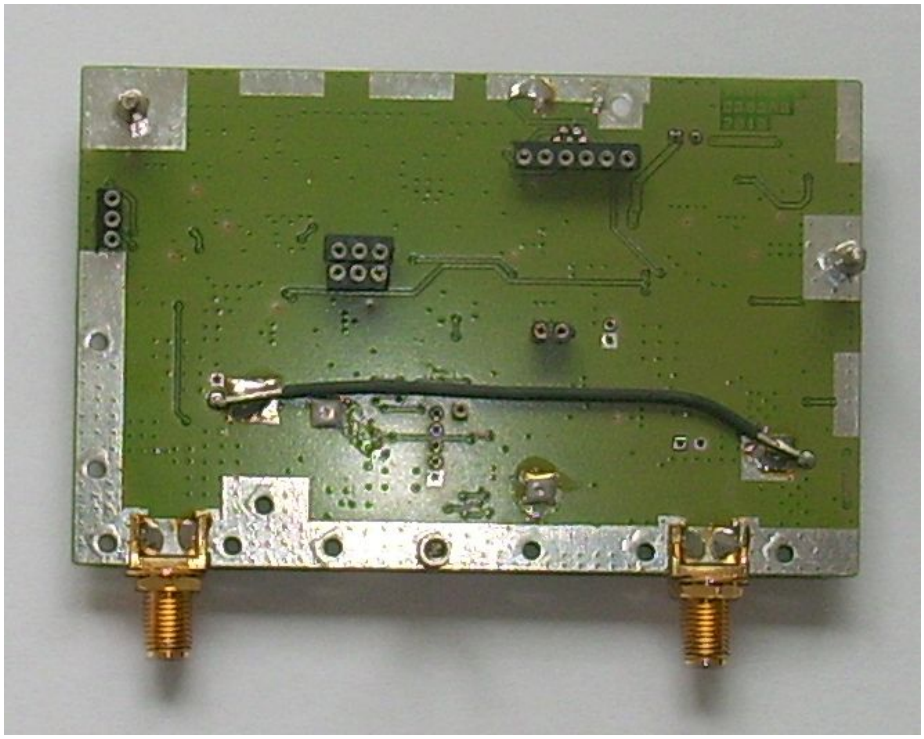

Figure 4: VNWA3 mounted in a brass chassis as seen from the bottom. Note that the bottom contains no components apart from a coaxial line and some connectors for an optional extension board.

Using only one stereo sound device with a switch to select between the Reflect and the Thru signal allowed for measuring *either* reflection *or* transmission during a single frequency sweep, but not both at the same time. So, if both are needed, they have to be measured alternately in separate sweeps. To double the measurement speed, an expansion board was developed that carries a second USB sound device and thus allows to measure reflection and transmission at the same time. Figure 5 shows this expansion board mounted underneath a regular VNWA3 board.

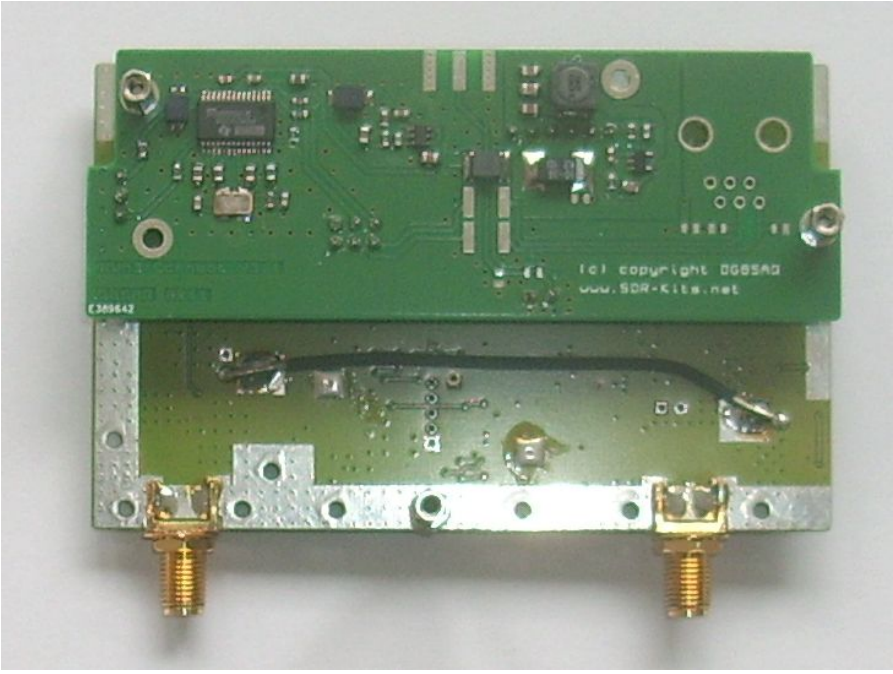

Figure 5: VNWA3E as seen from the bottom, which carries an expansion board below the original VNWA3 board.

Additionally, the expansion board offers two interfaces to the outside world. The RJ12 connector allows to access VNWA signals to control an external S-parameter test set, an RF-IV test set or to control an antenna rotor for radiation pattern measurements. It also provides 5V with up to 100mA to power external devices. Alternatively, the VNWA may be powered by an external power supply through this socket. An additional SMA connector provides either access to the internal VNWA clock source or allows to provide an external clock. This allows for interesting new applications like a high precision frequency meter as will be described in a future article.
Moreover, a switching regulator was added to power the DDS chips. Thus, the extra power consumption of the additional sound chip could be more than compensated. By the time the expansion board was developed, power consumption considerations became very important, as many customers used the VNWA3 in a mobile way outside labs powering it from the USB socket and thus from the battery of a notebook or tablet PC. This way, a very mobile piece of test equipment is available, which can easily be taken outside e.g. to test an antenna in the field. Figure 6 shows a VNWA3E controlled and powered by an 8 inch Windows 8.1 tablet PC.

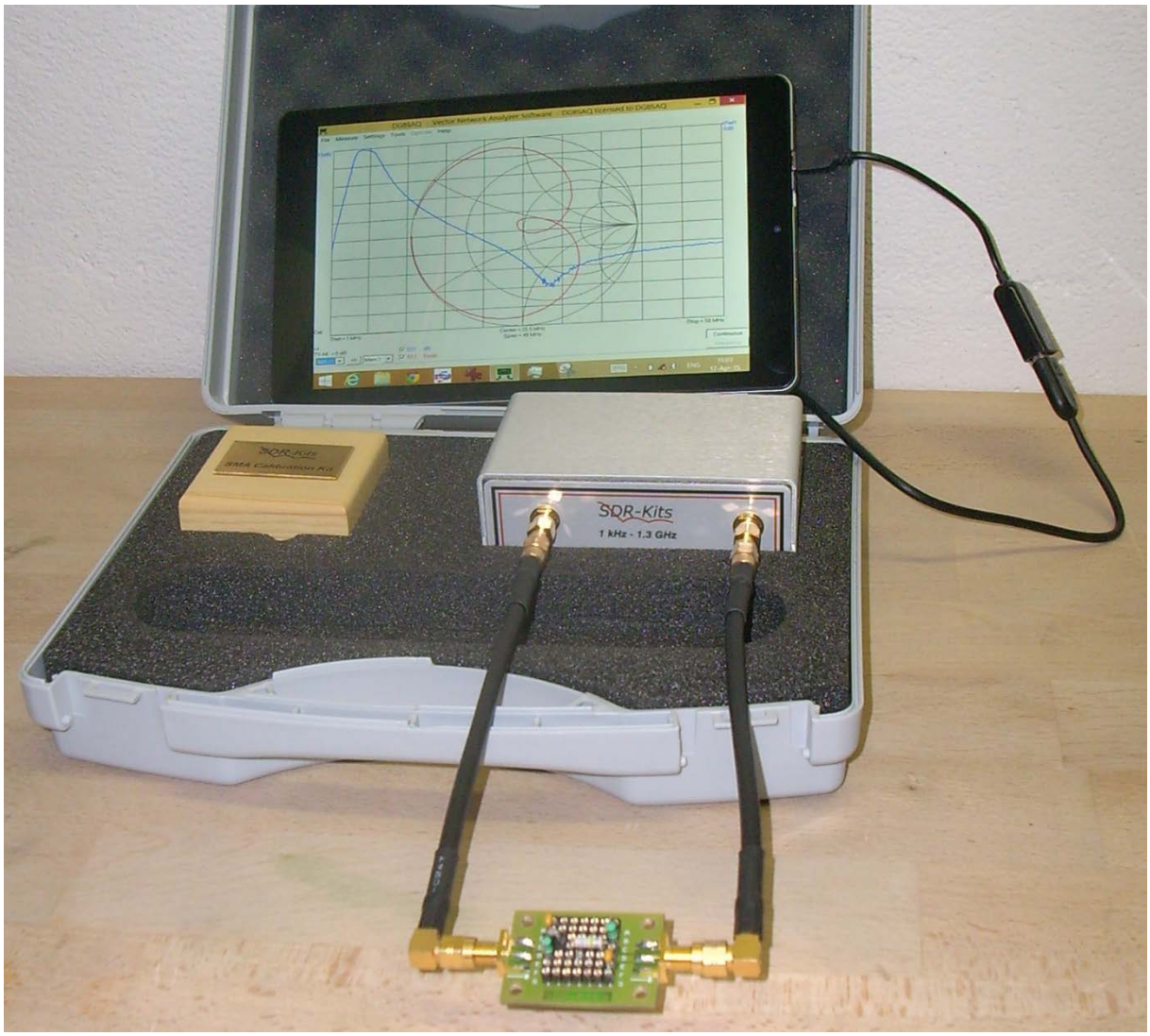

Figure 6: VNWA3E in its suitcase controlled and powered by an 8 inch Windows8.1 tablet PC measuring a band pass filter assembled on a test board. This setup allows for a run time of more than 2 hours with a single battery charge.

VNWA3 operation can be made even more mobile: Strapping the VNWA to a USB battery pack and a Wifi USB hub, the combo can be placed anywhere and remote measurements can be performed with the PC located anywhere else connecting to the VNWA via W-LAN [4].

In student labs with many PCs running, the Microsoft Windows operating system is certainly a cost factor, too. Therefore, a software package has been developed to operate the VNWA3/3E from a Linux PC using Wine [5].

3. Creative Application of Components

It may be surprising that VNWA3, which is useable up to 1.3GHz and beyond, uses Analog Devices AD9859 direct digital synthesizer chips as signal sources, which are specified for clock speeds of up to 400 MHz and “capable of generating a frequency-agile analog output sinusoidal waveform at up to 200 MHz” [6], which is the Nyquist limit for the sampled signal. Here, creativity is called for. Since these chips generate sampled waveforms, i.e. the waveforms are synthesized by a number of

rectangular pulses like the sound signal from an audio-CD, they do not just produce the frequency of the desired sinusoidal signal, but also a wide spectrum of normally undesired so called image or alias frequencies. Figure 7 demonstrates the expected output spectrum of a DDS tuned to 20MHz while clocked with 100MHz.

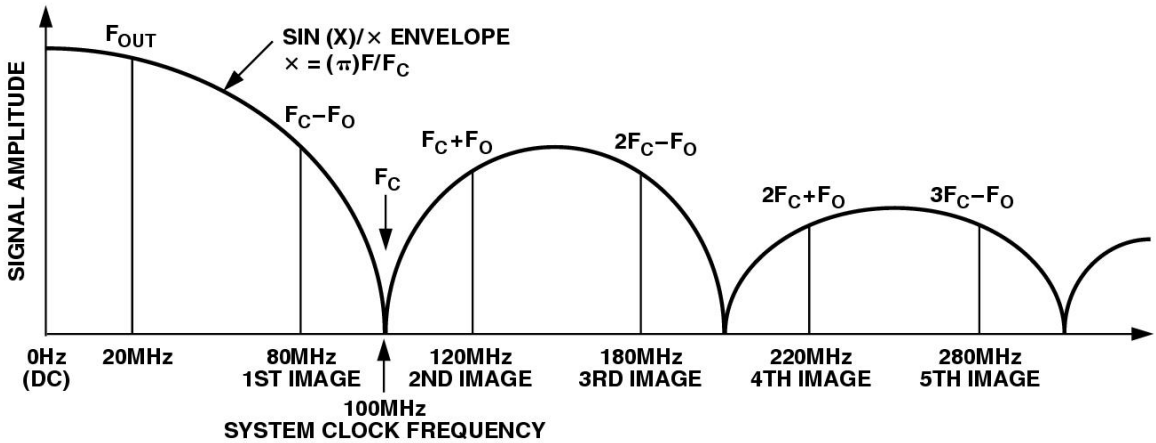

Figure 7: Ideal output spectrum of a direct digital synthesizer clocked at 100MHz (from [7] with Courtesy of Analog Devices).

Obviously, besides the desired 20MHz signal, there is a wide spectrum of additional alias signals at well-defined frequencies with predictable amplitudes. The amplitudes of these alias frequencies are modulated with the spectrum of a single pulse (sin(x)/x-envelope). Therefore, no signals at integer multiples of the clock frequencies can be generated. Normally, the alias frequencies are removed with an anti-alias low pass filter suppressing at least the spectrum from half the clock frequency (=Nyquist limit) upwards. This way, the DDS can produce at most half of the clock frequency. But there is no reason, why the higher alias signals should not be used. In fact, Analog Devices proposed exactly this (e.g. [7], page 11, figure 8). While the proposal suggested to use a band pass filter to extract the desired alias spectral line, this technique is out of the question for usage in a low cost wideband application like the VNWA. So, the full unfiltered RF and LO DDS spectra had to be applied to the mixer inputs. This posed a challenge: It is easily seen from Figure 7, that when two DDSes clocked with the same clock frequency produce two fundamental frequencies which are displaced by a small amount in order to produce this frequency difference as intermediate frequency (IF) in a mixer, all corresponding alias frequencies will show the same frequency displacement and thus, all aliases will mix into the same IF bandwidth and cannot be separated.
Since the VNWA shall only detect a frequency response at one specific alias frequency, a trick has to be found to select the specific alias frequency. The VNWA performs this trick by using two different clock frequencies for the LO and RF DDSes. This is achieved by the independent clock multiplier sections inside the DDS chips. Figure 8 shows an illustrative example of a frequency plan for such a situation.

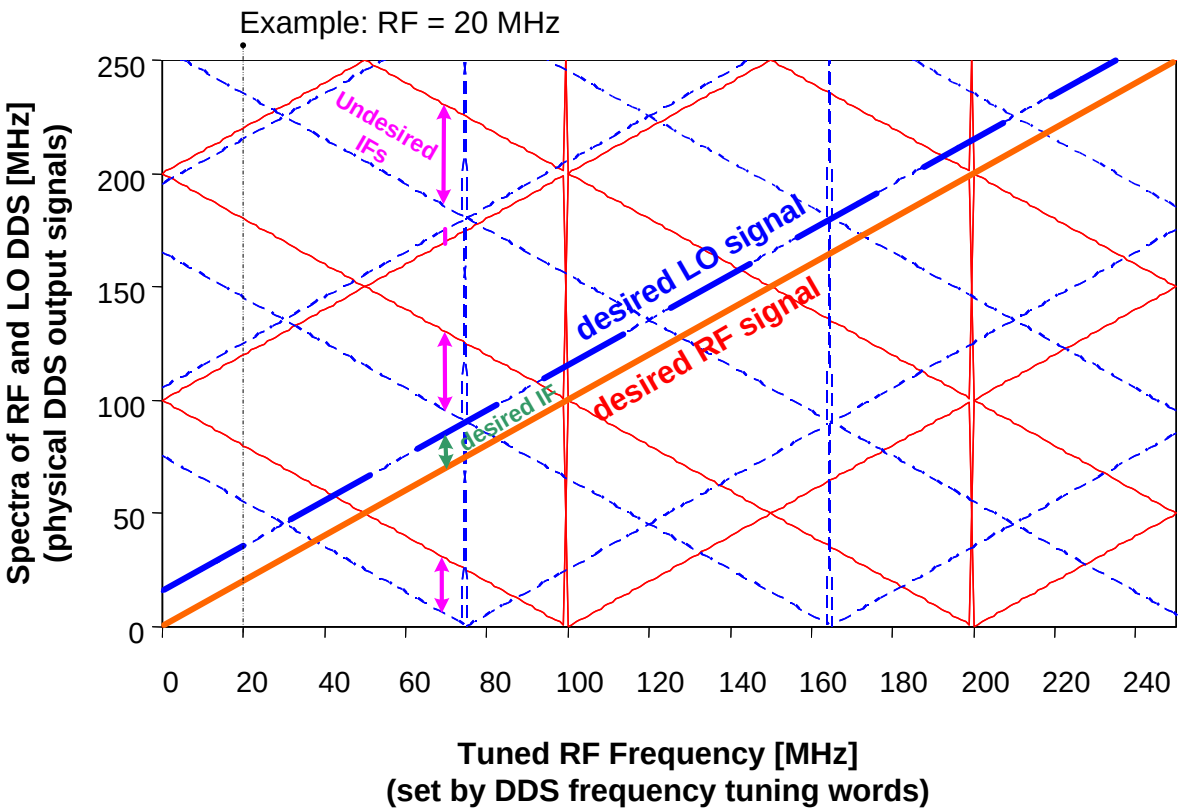

Figure 8: Example output spectra of RF (red) and LO (blue) DDS as a function of the selected RF frequency. The clocks have been chosen to be 100MHz for the RF DDS and 90MHz for the LO DDS. For better visibility the IF has been chosen to be about 15MHz.

Like in Figure 7, the RF DDS in Figure 8 is clocked with 100MHz. The red lines indicate the frequencies produced by the RF DDS as a function of the user defined desired output frequency. As an example, the output frequencies of Figure 7 can be reproduced by observing the intersection of the dashed vertical example line with the red lines (20MHz, 80MHz, 120MHz…). But a 20MHz RF signal is also produced if the user sets the RF DDS to produce 120MHz and thus intends to use the second image/alias. In contrast, the LO DDS is clocked with 90MHz in this example. The blue lines in Figure 8 depict the output frequencies of the LO DDS. The two thick red and blue lines indicate the desired part of the spectrum, i.e. an RF signal linearly tunable over the full range and an LO signal with constant displacement. The vertical displacement (=frequency difference) of red and blue lines will yield the mixer output frequencies, i.e. the IF spectrum. For better visibility, the desired IF has been chosen here to be about 15MHz. In fact, the VNWA3 uses an IF frequency in the audio range, which wouldn't be visible in this plot. Observe that by using this clocking scheme, generally only the desired DDS frequencies mix to this 15MHz IF. All other Aliases mix to different frequencies. Table 1 demonstrates the expected low frequency mixing products for Figure 8 at the example frequency of 20MHz.

RF / LO	**34,9**	**55,1**	**124,9**	**145,1**	**214,9**	**235,1**
20	14,9	35,1	104,9	125,1	194,9	215,1

80	45,1	24,9	44,9	65,1	134,9	155,1
120	85,1	64,9	4,9	25,1	94,9	115,1
180	145,1	124,9	55,1	34,9	34,9	55,1
220	185,1	164,9	95,1	74,9	5,1	15,1
280	245,1	224,9	155,1	134,9	65,1	44,9

Table 1: Expected low frequency mixing products at the example frequency of 20MHz as of Figure 8. The first column shows the RF DDS output frequencies, the first row shows the LO DDS output frequencies. All frequencies are in MHz. Note, that only one pair of alias frequencies mix to the desired IF of 14.9MHz (marked green). Had an IF of exactly 15MHz been chosen, the yellow marked mixing product would also fall into the desired IF bandwidth and thus cause an interference at exactly 20MHz measurement frequency.

Observe that only the first frequency pair produces the desired IF frequency of 14.9MHz (marked green). The pair marked in yellow produces an IF nearby, which can easily be removed by appropriately filtering the IF signal, though. Note, that the VNWA3 IF bandwidth extends from near 0Hz to about 20kHz as the utilized USB audio devices used have a very steep anti-aliasing low pass filter implemented on chip. Moreover, the IF bandwidth can further be reduced by means of digital filters in the PC software. Only at some specific frequencies, undesired aliases also mix into the desired IF bandwidth. This will produce interferers at specific frequencies and was initially accepted as tradeoff for the simplicity and low cost of this solution. Figure 9 proves that this concept works.

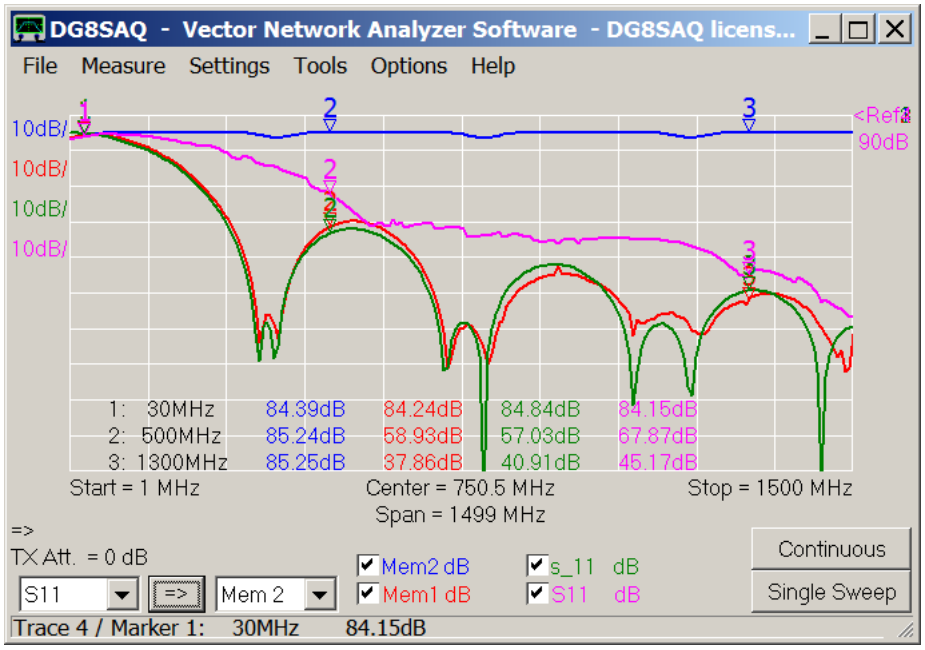

Figure 9: Measured Reflect signal (unnormalized) of the open TX port. Blue: RF and LO clock = 396MHz => different alias responses cannot e separated; Red: RF Clock = 360MHz, LO Clock=396MHz => aliases can be separated; Green: theoretical prediction of the red curve; Pink: dynamical clock selection => no more signal “holes”.

The blue and red trace both show the measured Reflect signal of the open TX port. The blue trace was measured with both RF and LO DDS clocked with an identical 396MHz clock. Clearly, the aliases cannot be separated and the response to the sum of all aliases is obtained, thus the response shows

a periodicity of the clock frequency. In contrast, the red trace was obtained with different clock frequencies for RF DDS (360MHz) and LO DDS (396MHz). Now, the responses of the different alias signals can be separated. A weak but clearly visible response is obtained up to the 8th alias at 1300MHz.
The green trace shows the theoretical prediction, which is the product of theoretical RF and LO DDS amplitudes:

$$A_{theory} \propto \frac{\sin(\pi f/360MHz)}{f} \cdot \frac{\sin(\pi f/396MHz)}{f}$$

This matches well with the measured response.

Figure 9 also shows another challenge to be solved: Near the clock frequencies, the signal amplitudes drop to very low values. Thus, no meaningful measurements can be performed there. Since the DDS clocks are being derived by a chain of PLL clock multipliers (see Figure 2), optimum individual DDS clock frequencies can easily dynamically be selected for every measurement frequency during a sweep, which also allows to suppress most interferers being caused by undesired first order mixing products. This technique has been utilized in Figure 9 to obtain the pink response. Clearly, the notches or “holes” in the signal amplitude are gone.
If the user agrees to overclock the DDS chips, the dynamical overclocking scheme makes use of clock frequencies up to 720MHz. Experiments and longtime monitoring revealed that the AD9859 DDS chips operate reliably and without getting more than hand warm beyond this clock frequency which is almost twice the specified value. Every VNWA3 is tested individually up to 1.3GHz operation frequency and 720MHz DDS clock frequency before shipment.
Another interesting fact is, that there is no hard frequency limit. With increasing alias order, the signal amplitudes simply decrease and measurements become just increasingly noisy. Some experimenters have performed meaningful measurements at 2.4GHz and beyond.
It is also surprising that the SA612 mixers can be used way beyond their specification limit of 500MHz. The data sheet even specifies the LO part only up to 200MHz. The latter is misleading, though, as this is the limit for oscillator operation only. Here, the SA612 oscillator section is not used as oscillator, but as small signal buffer amplifier. So, there is no reason, why it should not perform as fast as the rest of the chip. And indeed it does. Nevertheless, it was surprising, that stable operation could be obtained well beyond this frequency. One reason lies in the fact, that the mixers are operated well below the compression limit in order to obtain accurate measurement results. The SA612 mixers are the best compromise of low frequency performance, high frequency performance and high common mode input impedance. Together with the DDS chips, all mixers are being tested and documented up to 1.3GHz before a VNWA is shipped. We do not consider such creative component application a risk. On the one hand, component parasitics only play a minor role in the frequency range of question, as the wavelengths are still considerably larger than the component wires. On the other hand, improved chip production processes lead to smaller chip structures, which in turn will improve high frequency performance. Finally, individual performance variations will be compensated by the mandatory calibration process with calibration standards (SOLT calibration) by the user.

4. Practical Examples

Figure 10 shows a typical VNWA output spectrum as generated by the RF DDS when nominally set to 80MHz. Here, the RF DDS is clocked at about 650MHz. In addition to the 1st…4th alias, a spurious signal at the clock frequency and its first harmonic can be seen. As discussed before, the Nyquist criterion normally limits DDS usage to the frequency range of up to one half of the clock frequency, which would amount to 325MHz in this case. In this range the spectrum is clean. But here, the alias signals are being used to extend the frequency range of the VNWA to beyond 1.3GHz. Since no spectrum forming filters are used in the hardware, using e.g. the 1.2GHz alias will mean, that at the same time several considerably stronger signals at lower frequencies are being applied to the DUT and to the mixers, since the LO spectrum looks quite similar.

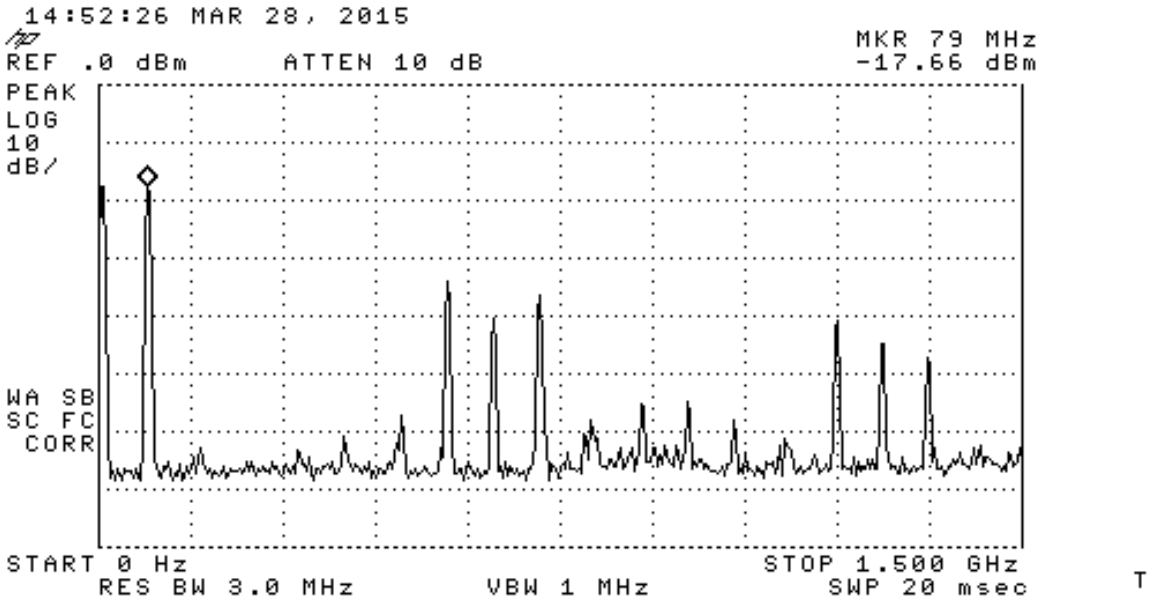

Figure 10: VNWA3 output spectrum at nominally 80MHz as measured with a HP8591A. The marker is set to the desired signal and indicates about -17dBm. In addition to the 1st…4th alias, a spurious signal at the clock frequency and its first harmonic can be seen.

While in theory the clocking scheme discussed in the previous chapter should guarantee that only the desired signals mix into the receivers' analysis bandwidth, in reality strong undesired alias signals produce very low level higher order mixing products that fall into the IF bandwidth and may cause interferences. In most cases, this is no problem as the desired signals normally are a lot stronger, e.g. when doing reflection measurements. But when doing transmission measurements, there are cases where high attenuation levels at weak UHF frequencies are to be measured while at the same time the unwanted very strong low frequency alias signals are present, e.g. when measuring high rejection UHF notch or low pass filters. On the other hand, when measuring a band pass filter, the DUT itself will suppress undesired alias frequencies and thus prevent such problems. In the following two examples for the two discussed cases are being shown.

a. UHF band pass filter

Figure 11 compares measurements taken on a micro-strip band pass filter performed with the VNWA3E and with an HP8591A spectrum analyzer with tracking generator. Both measurements are in good agreement, also in the stop band regions. As discussed before, there is no hard upper frequency limit as aliases are being produced up into the microwave range. Here, the VNWA measurement was extended up to 1.7GHz by using aliases. Also note, that small deviations between the measurements are to be expected, as neither the spectrum analyzer nor the VNWA have perfect 50 Ohm termination impedances over the full displayed frequency range. A VNWA can calibrate out influences of these imperfections, while a scalar network analyzer cannot.
At the same time the VNWA software's capability to overlay measurements on top of an image is demonstrated in Figure 11. The background image shows a photograph of the measured micro-strip filter and a pen for size comparison. This overlaying capability is particularly useful, when own measurements are to be compared to manufacturer's measurements, which may only be available as image or in paper form. A graph of a third party measurement can easily be imported into the VNWA software. It can then be rotated and scaled until it matches the VNWA grid. Thus, the third party measurement and the own measurement can be compared. Moreover, using the VNWA software mouse cursor, specific values of the third party measurement can be extracted.

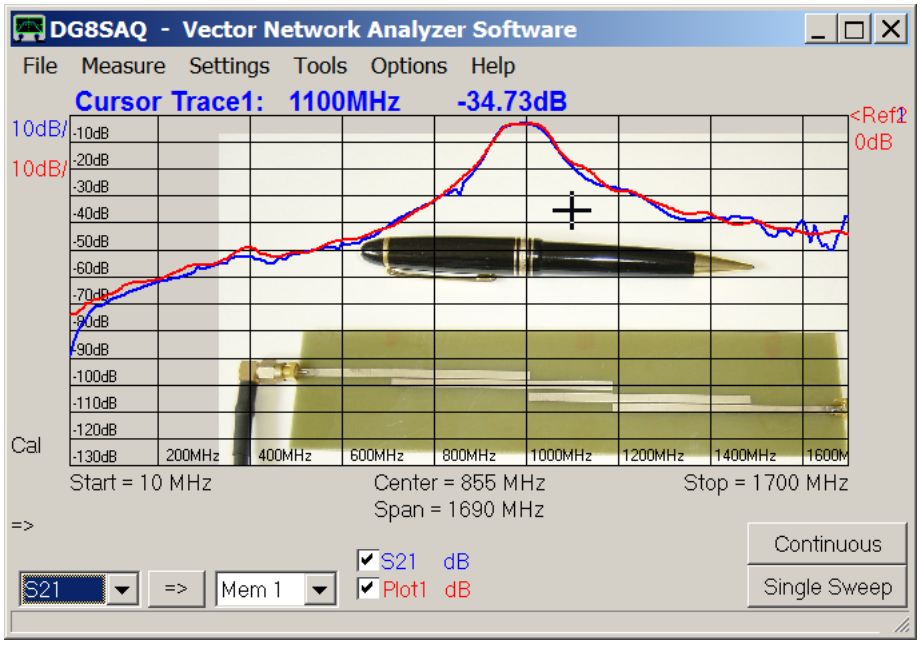

Figure 11: Measurements of a microstrip band pass filter. Blue: VNWA measurement; Red: Measurement with an HP8591A spectrum analyzer with tracking generator. The background shows a photograph of the actual microstrip filter and a pen. Also visible is the cursor cross and the bold blue cursor position values. Note that the VNWA measurement spans to 1.7GHz here!

b. UHF low pass filter

Figure 12 shows an example, where the suppression of undesired aliases does NOT work perfectly.

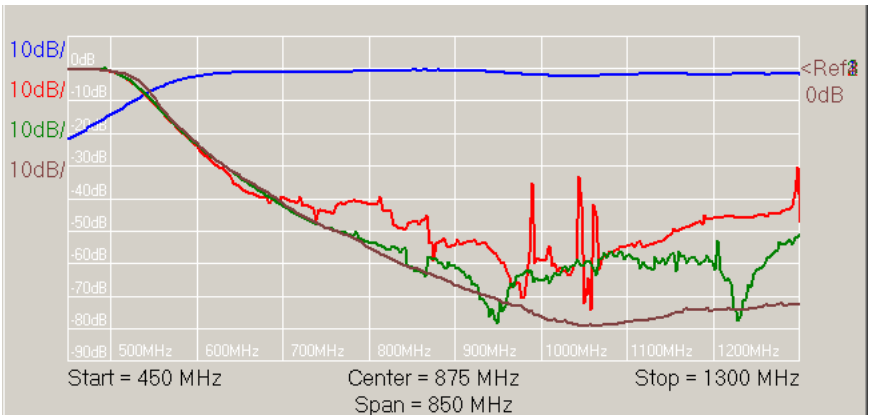

Figure 12: Measurements of a UHF low pass filter. Red: VNWA measurement; Brown: Measurement with an HP8591A spectrum analyzer with tracking generator. While the passbands are in good agreement, the stopbands are not. Green: VNWA measurement after adding a high pass filter (blue trace) to the signal path. Note, that the frequency response of the high pass filter has been calibrated out in the green trace. The improvement can clearly be observed.

Here, the transmission through a high suppression UHF low pass filter is being measured. The red trace, which has been measured in a standard setup, already starts showing deviations at attenuation levels around -25dB due to higher order undesired mixing products of strong low frequency aliases that can pass without attenuation through the low pass filter to the RX input. The situation can be improved by adding a high pass filter (blue trace) to the signal path (i.e. between DUT and RX port), which will decrease the levels of the low frequency aliases at the RX mixer input. The frequency response of the high pass filter can be calibrated out by means of normal VNWA calibration procedures. The green trace shows a measurement with the high pass filter in place. Clearly, reliable results can be obtained down to -50dB now in this setup.

5. Summary:

In this first part, the design and principle of operation of the VNWA3 have been explained. It was shown, how the instrument can achieve a frequency coverage well beyond the fundamental output frequencies of the used signal sources. Practical examples of the chances and limitations of this design have been shown.

References

1. Free VNWA software download from: http://www.sdr-kits.net/vnwasoftware/
   Latest beta versions available from:
   https://groups.yahoo.com/neo/groups/VNWA/files/A1%20DG8SAQ/
   Note, that the VNWA hardware is copyright protected by SDR-Kits.
2. T. Baier, "A Low Budget Vector Network Analyzer for AF to UHF", QEX March/April 2007, pp. 46-54, American Radio Relay League.
3. T. Baier, "A Small, Simple, USB-Powered Vector Network Analyzer Covering 1 kHz to 1.3 GHz", QEX January/February 2009, pp. 32-36, American Radio Relay League.
4. http://hamcom.dk/VNWA/How to Operate VNWA2 and VNWA3 Remotely Wired or Wireless.pdf
5. http://www.sdr-kits.net/DG8SAQ/VNWA/VNWA_Linux_Package.zip
6. Analog Devices, AD9859 Data Sheet Rev. A.
7. Analog Devices, AD9851 Data Sheet Rev. D.